OPERATING INSTRUCTIONS
CPR605

FEATURES :

- Monitoring current of 3Ø-4wire.
- Trip current range(% of phase current) 30,40,50,60,70,80,90,100,110,120
- Hysterisis range(% of trip current) 5,10,15,20,25,30(for auto reset)
- Selectable trip time delay(seconds) 0.2,0.4,0.6,0.8.1,2,4,6,8,10
- Two output relay (Normal & Fail Safe)
- LED indication

SPECIFICATIONS

1. FUNCTION
Monitoring trip levels of 3Ø-4wire.

2. NOMINAL VOLTAGE(Vn)
240V AC(50-60Hz)

3. OVER VOLTAGE
1.5xVn continuous
2xVn(3 sec)

4. SUPPLY VARIATION
0.75 to 1.25xVn

5. PHASE CURRENT
5A (50-60Hz)

6. TRIP LEVEL CURRENT (% of Phase current)
30,40,50,60,70,80,90,100,110,120

7. HYSTERESIS (% of trip level)
5,10,15,20,25,30

8. TRIP TIME DELAY (SECONDS)
0.2,0.4,0.6,0.8,1,2,4,6,8,10

9. RATED CURRENT
5A

10. CURRENT TRIP LEVEL
30 % to 120% of phase current

11. ACCURACY
±0.5 % at constant condition

12. RESET
Auto reset(on removal of fault condition)

13. RESPONSE TIME
100ms.

14. OUTPUT RATING
Normal relay:
SPDT: NO (5A @250 V AC)
NC (3A @250 VAC)
Fail safe relay:
SPST:NO (5A @250 VAC)

15. OPERATING TEMPERATURE
0 to 50 °C

16. RELATIVE HUMIDITY
95% (non-condensing)

17. MOUNTING
Din rail mounting(35mm)

18. WEIGHT
142gms

SAFETY SUMMARY

All safety related codifications, symbols and instructions that appear in this operating manual or on the equipment must be strictly followed to ensure the safety of the operating personnel as well as the instrument.

If the equipment is not handled in a manner specified by the manufacturer it might impair the protection provided by the equipment.

⚠ **CAUTION:** Read complete instructions prior to installation and operation of the unit.

WIRING GUIDELINES

⚠ **CAUTION**

1. To prevent the risk of electric shock power supply to the equipment must be kept OFF while doing the wiring arrangement.
2. Wiring shall be done strictly according to the terminal layout with shortest connections. Confirm that all connections are correct.

⚠ **CAUTION**

1. To ensure the safe operation of unit, check the wiring and connections.
2. It is recommended to test the unit periodically to satisfy the regulations.

MAINTENANCE

1. The equipment should be cleaned regularly to avoid blockage of ventilating parts.
2. Clean the equipment with a clean soft cloth. Do not use Isopropyl alcohol or any other cleaning agent.

DIMENSIONS (All dimensions in mm)

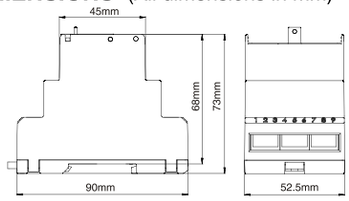

TERMINAL CONNECTIONS

● Without External CT

NOTE: The relays are in De-energised condition

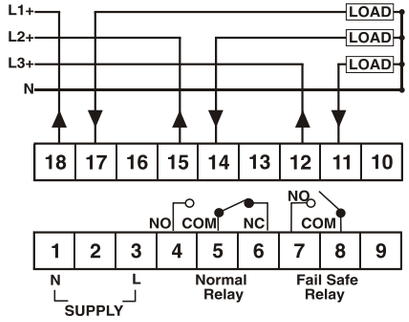

● With External CT

NOTE: To monitor higher current, use suitable CT.

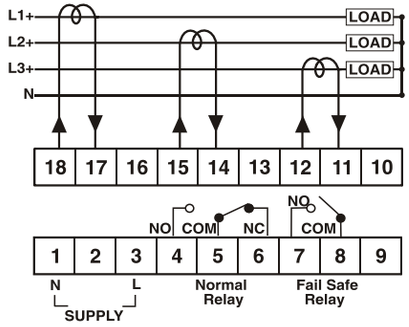

TIMING DIAGRAM

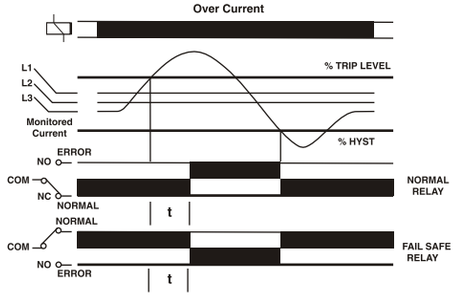

LED INDICATION CHART

Condition	Green LED	Red LED	Normal relay	Fail safe relay
Normal	ON	OFF	De-Energised	Energised
Fault	ON	ON	Energised	De-Energised

INSTALLATION & OPERATION

1.Connect the unit as shown in the terminal diagram
2.Set trip level, hysterisis & trip time delay
3.Apply power

(Specifications subject to change as development is a continuous process).

Selec Controls Pvt. Ltd., India,
(Formerly Selectron Process Controls Pvt. Ltd.)
Tel:91-22-28476443, Fax:91-22-28471733, Tollfree: 1 800 227353
Website: www.selecindia.com E- mail: sales@selecindia.com